LITE TOPS

MADE IN AMERICA

joekrauslighting 301-537-5808 joe@joekrauslighting.com www.joekrauslighting.com

Wood 'n Tap

Download App
Get $5
Sign Up Reward

NO EXIT
CAUTION
RIDGID

SATCO

Carlos Santos

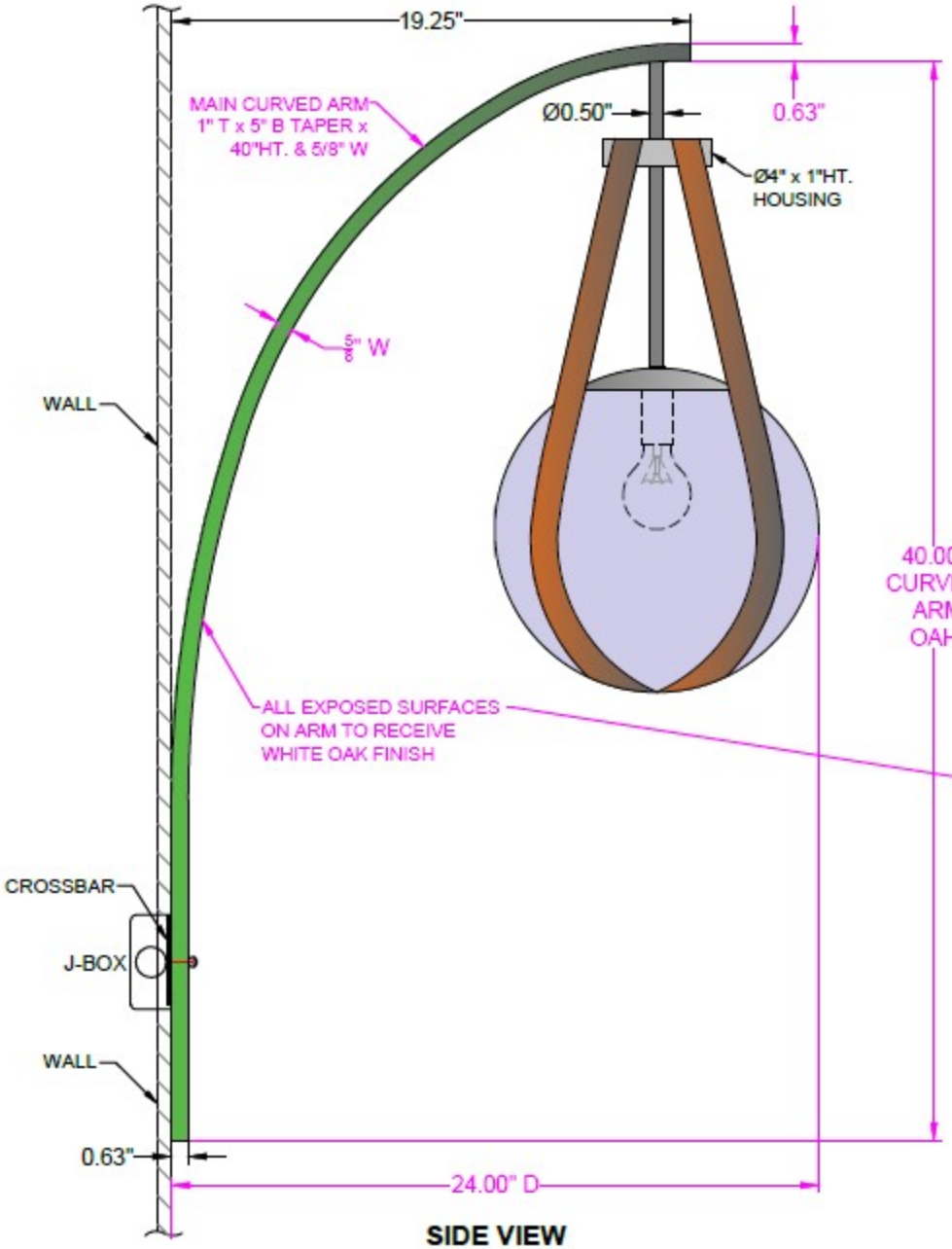

SIDE VIEW

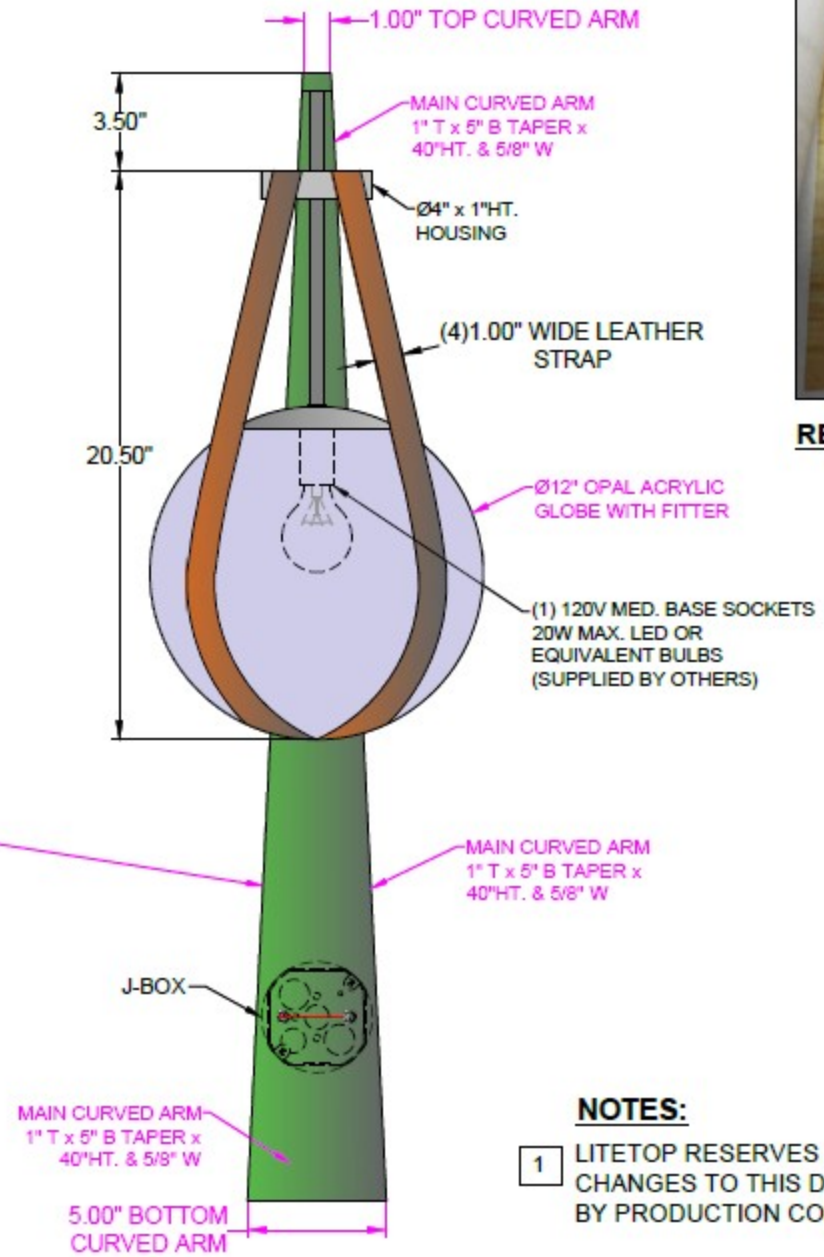

FRONT VIEW

REF

NOTES:

1 LITETOP RESERVES TH
CHANGES TO THIS DRA
BY PRODUCTION CONS

CUTTING

Take a Pitcher...
Mocktails-n-More

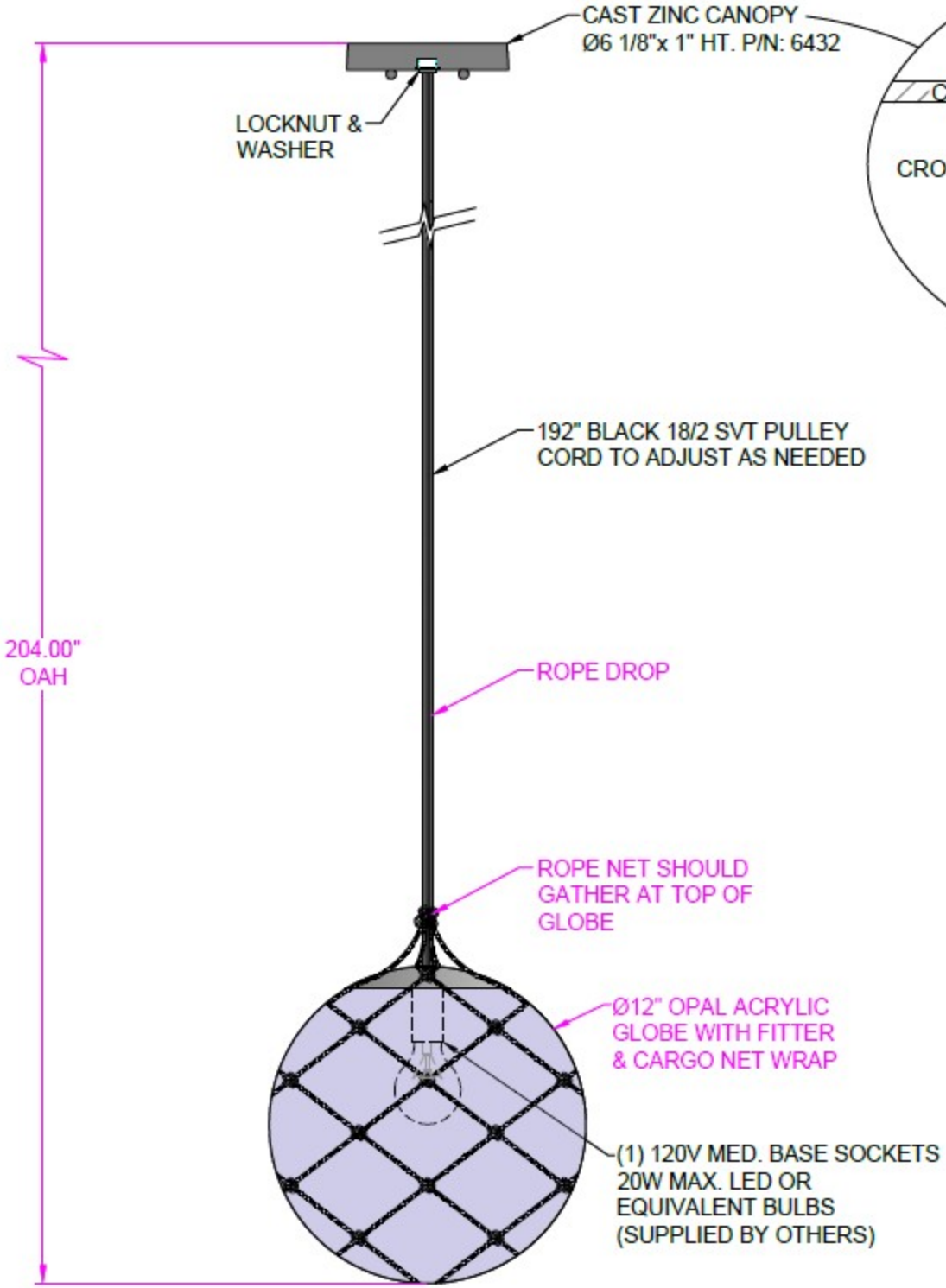

FRONT VIEW

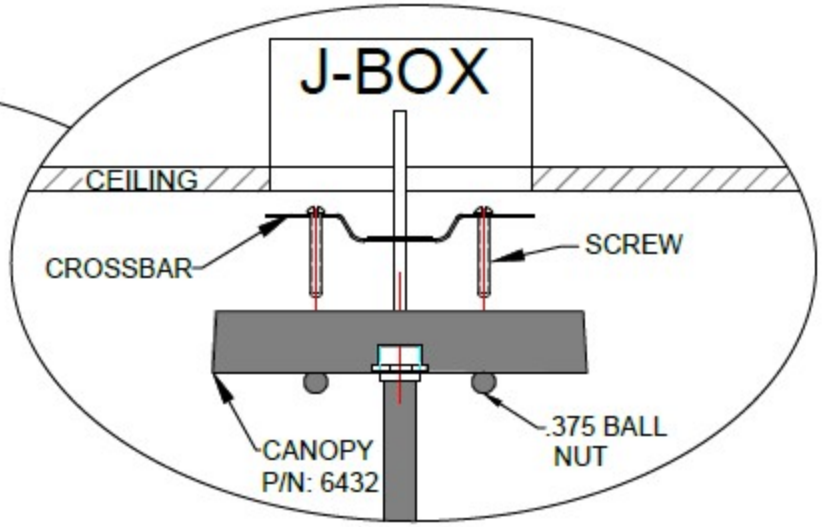

CANOPY ASSY.

NOTES:

1 LITETOP RESERVE
CHANGES TO THIS
BY PRODUCTION C

CUS

CUSTOMER: HIL
PROJECT: WNT
SHADE: ø12"W
MATERIAL: MET
FINISH: ORB
REF# (P2)
PO: 03132023
UNITS: 5
DRAWN: BIPIN
DATE: 4/9/2025
CHECK: PC